coldline

Client Quantity
Project Position

Master 500 lt cabinet

Model: A50/1NR **Cod:** A14051100101

Technical data

Gross capacity:	417 lt
Temperature range:	0°+10°C
Refrigerant unit:	Remote
Defrost:	Off cycle automatic
Valve:	Supplied standard with solenoid
Dimensions:	630×715×2085 mm
Packing dimensions:	835×830×2250 mm
Gross weight:	115 Kg
Voltage:	220-240 V - 50-60 Hz
Total rate:	220 W
Absorbed Current:	1,0 A
Cooling capacity:	448 W*
*:	Evap. -10°C Cond. +55°C

Features

Standard equipment:	3 slides for 42x53 cm shelves 3 plastic coated 42x53 cm shelves, lock with key, LED lighting
Control:	Electronic, display flush with the panel
Doors:	1 door, self-closing with a 105° stop, right hinged
Door gasket:	Magnetic, triple chamber and easily replaceable
Insulation:	75 mm thickness - CFC/HCFC free
Exterior/interior finishing:	Interno/esterno in acciaio inox AISI 304; schiena esterna, fondo e interno vano tecnico in acciaio galvanizzato/colaminato
Inner corners:	Rounded for easy cleaning and ensuring maximum hygiene
Handle:	Stainless steel AISI 304, 2 mm thick
Racks and slides:	Acciaio inox AISI 304
Feets:	Stainless steel AISI 304, adjustable h 100-150 mm

Remote unit technical data

Voltage:	220-240 V - 50 Hz
Cooling gas:	R452A
Gross weight:	17 Kg
Dimensions:	450x300x270 mm
Packing dimensions:	470x330x300 mm
Cooling capacity:	Evap. -10°C Cond. +55°C

In order to constantly offer the best possible products we reserve the right to make changes on technical specifications without incurring any obligation for equipment previosly or subsequently sold.

COSMO - wi-fi control

Cosmo is the innovative wi-fi technology that allows to connect all Coldline appliances in the kitchen and monitor them constantly from your smartphone. Connect Master cabinets to a Cosmo hub (MODI, VISION or LEVTRONIC) and from the app you can check the operating conditions of each machine in real time and receive any alerts in the event of power cuts or improper personnel interventions.

Technical draw

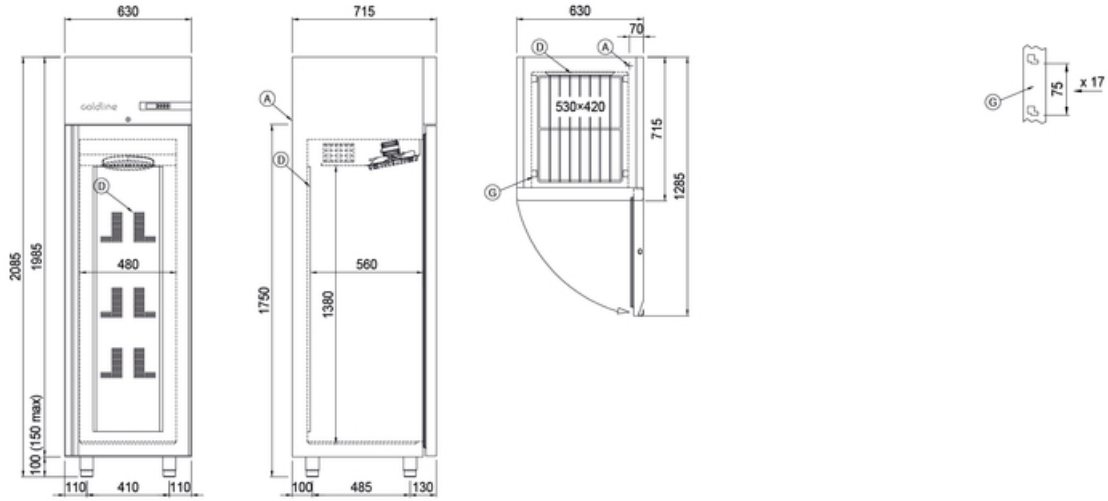

A: Power supply cable outlet
D: Airflow conveyor
G: Racks pitch
J: Automatic evaporation of condensing water

In order to constantly offer the best possible products we reserve the right to make changes on technical specifications without incurring any obligation for equipment previosly or subsequently sold.